SPECIFICATION APPLIED

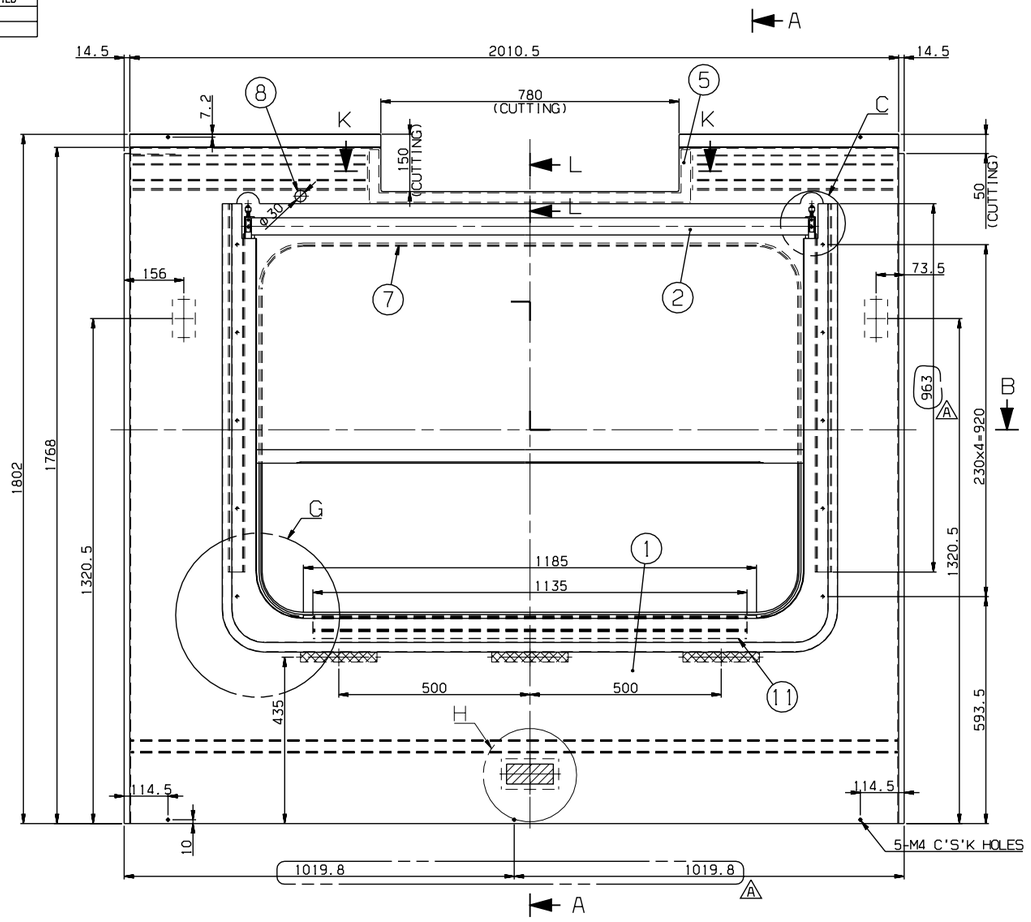

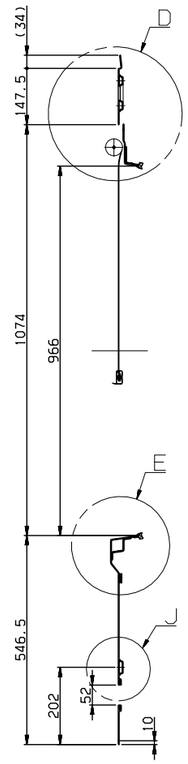

SECTION A-A

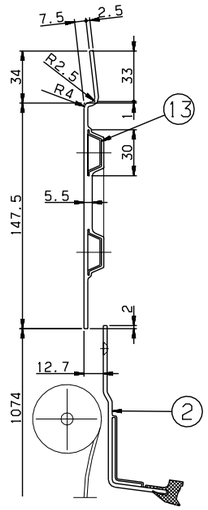

DETAIL D
SCALE=1/2

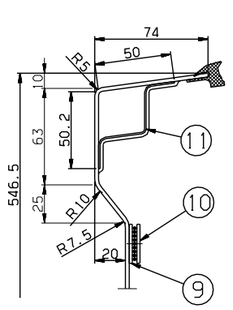

DETAIL E
SCALE=1/2

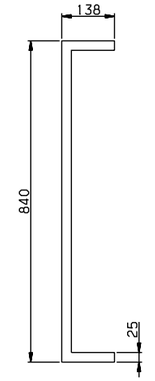

DETAIL #5
SCALE=1/8

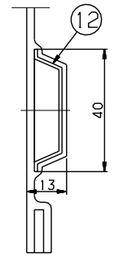

DETAIL J
SCALE=1/1

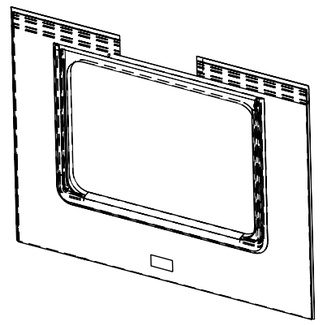

ISO VIEW

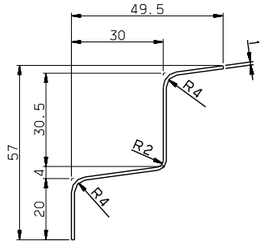

DETAIL #11
SCALE=1/1

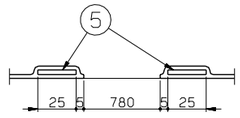

SECTION K-K
SCALE=1/2

NOTE

1. AN INTERIOR PANEL'S COLOR(RAL 7047) AND SURFACE SHALL BE MANUFACTURED AFTER SAMPLE'S APPROVAL BY CUSTOMER
2. PART 7 SHALL BE CUT ADEQUATELY AND USED
3. PART 8 IS TO PROTECT
4. PART 2 SHALL BE WELL OPERATED UNDER CONDITION OF ASSEMBLY
5. PART 9 SHALL BE FIXED ON THE PART 1, AND PART 10 SHALL BE DELIVERED SEPERATETLY
6. THE INTERFACE BETWEEN PART 1 AND PART 2 SHALL BE STRONGLY SEALED
7. PART 4 SHOULD BE APPLIED WITH PART 15.

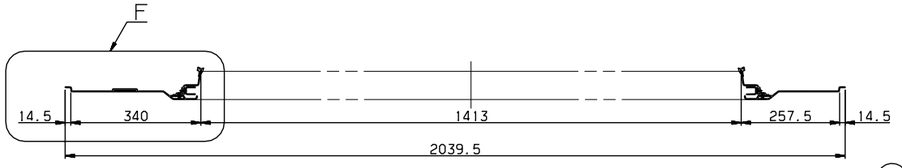

SECTION B-B

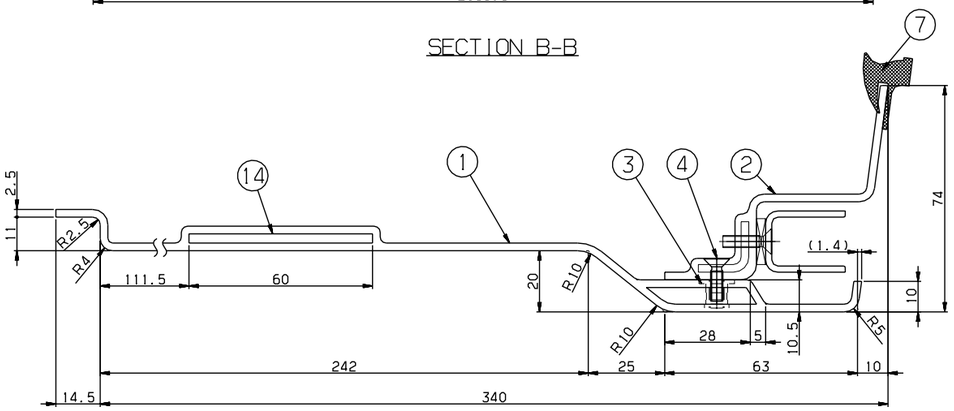

DETAIL F
SCALE=1/1

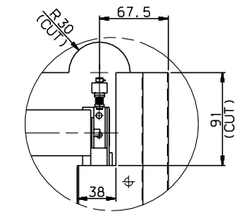

DETAIL C
SCALE=1/3

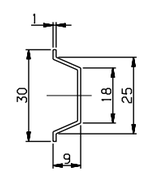

DETAIL #13
SCALE=1/1

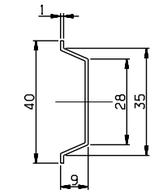

DETAIL #12
SCALE=1/1

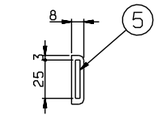

SECTION L-L
SCALE=1/2

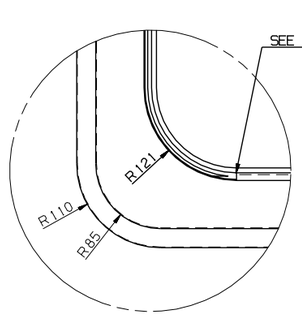

DETAIL G
SCALE=1/4

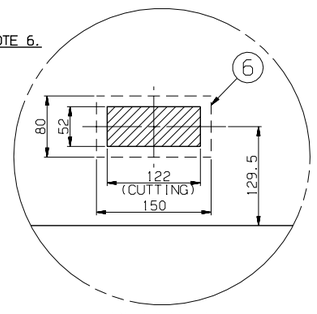

DETAIL H
SCALE=1/4

기호 MARK	일자 DATE	변경 내역 DETAIL OF REVISION(E.C ZONE)	설변번호 E.C NO.	설계 DGN	검도 CHK	승인 APP
Ax4	2014.12.18	ADDED PART NO.#15 & DIMENSION	RSD1402-U071	H.U.LEE	K.B.PARK	J.Y.LEE

일반공차 GENERAL TOLERANCE			
등급 GRADE	A	B	C
기계 가공품 MACHINING (±)			
~6	0.05	0.1	0.2
~30	0.1	0.2	0.5
~120	0.15	0.3	0.8
~315	0.2	0.5	1.2
~1M	0.3	0.8	2.0
~2M	0.5	1.2	3.0
~4M	0.8	2.0	4.0
~8M	-	3.0	5.0
~12M	-	4.0	6.0
~15M	-	5.0	7.0
~20M	-	6.0	8.0
용접 구조물 WELDING (±)			
등급 GRADE	A	B	C
~100	1	1.5	
~200	1.5	2	
~400	2	3	
~800	3	4	
~1600	4	5	
~3150	-	7	
주물, 주조품 CASTING (±)			
~20M	8	16	24
~15M	7	12	21
~12M	6	10	18
~8M	5	8	14
~4M	4	6	11
~2M	3	4	8
~1M	2	3	5
~315	1	2	4
~120	1	2	3
~30	1	1	1

품번 NO.	부품 번호 PART NO.	품명 DESCRIPTION	재질 MATERIAL	수량 Q'TY	검증 V.T	비고 REMARKS
15	CP910004-406	ADHESIVE	ASSY	1		LOCTITE 242
14	RFP51130EJ0-014	SEAT,TAP	SUS304	2		PL T3x100x60
13	RFP51130EJ0-013	STIFFENER	A1050P	4		T1
12	RFP51130EJ0-012	STIFFENER	A1050P	1		T1
11	RFP51130EJ0-011	STIFFENER	SUS304	1		T1,L=1135
10	RFP51130EJ0-010	DUAL_LOCK,FASTENER	ASSY	3		3M,SJ-3550 L=200(DUAL TAPE)
9	RFP51130EJ0-009	DUAL_LOCK,FASTENER	ASSY	3		3M,SJ-3551 L=200(DUAL TAPE)
8	RFP90013AN0	RUBBER,BUSH	ASSY	1		F2.2332
7	RFP51130EJ0-007	RUBBER,SECTION	ASSY	1		RFP51011AN0,L=4600
6	RFP51130EJ0-006	SEAT,TAP	SUS304	1		PL T3x150x80
5	RFP51130EJ0-005	SEAT,TAP	SUS304	1		PL T3x840x138
4	RS60607-098S	SCREW,F,H	SUS304	10		M4x14
3	RFP51130EJ0-003	NUTSERT	SUS304	10		M4
2	RFP51009AN0	PANEL,BLIND WINDOW	ASSY	1		
1	RFP51130EJ0-001	PANEL	FRP	1		T2.5

승인 APP	JeongYul Lee 2014.10.14	재질 MAT'L	ASSY
검도 CHK	KeongBong Park 2014.10.14	중량 G.W	
설계 DGN	HeonUk Lee 2014.10.14	일정관리	MC B / WD B / CT B
제도 DRG	HeeSook Jeong 2014.10.14	SIZE	A1

TITLE: WINDOW,MASK,TYPE Y

DRG. NO: RFP51130EJ0 | Ver. 00 | Rev. -A | SCALE 1/8 | SHEET 1 of 1

RSD1402 | RFP- | 도-PRJT | 참리번호 | CATIA

REF. NO.

HYUNDAI Rotem 현대로템주식회사

본 도면은 당사 재산이므로 무단복사/배포 금지. PROPERTY OF ISSUING ENTITY. CANNOT BE DISTRIBUTED OR REPRODUCED WITHOUT AUTHORIZATION.